GSoC’25| Proposal

Yashvant Singh (JatsuAkaYashvant)

mobile-app- Flutter Upgrade

Project Info

Code Repositories:
https://github.com/CircuitVerse/mobile-app

Description:
Project focuses on updating the CircuitVerse mobile application to ensure compatibility with the latest Flutter framework. The key objectives include:

- Upgrading the app to the newest Flutter version for improved performance and stability.
- Optimizing performance by reducing load times, minimizing unnecessary rebuilds, and enhancing state management.
- Implementing circuit embedding to allow seamless integration and sharing of circuits within the mobile app.
- Fixing bugs and UI inconsistencies to deliver a smoother and more reliable user experience.

The project aims to modernize the app while maintaining backward compatibility, ensuring that users benefit from both new features and a polished mobile experience.

Priority: High	**Size:** Medium
Tags: Dart, JavaScript	**Mentors:** @hardik17771, @tachyons

Personal Details

Name- Yashvant Singh
Major- Electrical Engineering
College- National Institute of Technology, Hamirpur

Country- INDIA
Email- yashvantsingh2k3@gmail.com
Github- https://github.com/JatsuAkaYashvant
Slack- @Yashvant Singh
LinkedIn- https://www.linkedin.com/in/yashvant-singh-90787a290/
Time Zone- Indian Standard Time (UTC +5:30)

Academic Studies

B-TECH, Electrical Engineering

National Institute of Technology, Hamirpur(2023-2027)

Work Experience

Flutter Developer- @APPTEAM-NITH (OCT 2023 - Present)

Design Head @ART OF LIVING-NITH (JAN 2025- FEB 2025)

Resume - Yashvant-Singh-Resume

About Yourself

Please describe yourself, including your development background and specific expertise.

I love creating things that solve real problems, whether it's building smart devices, developing apps, or hacking together prototypes. The thrill of turning an idea into something that actually works is what drives me every day!

Here's What I've Built So Far:

Smart Air Purifier + Room Monitoring App

- Designed a system that tracks air quality (temperature, humidity, CO2, AQI) in real time and syncs data to the cloud.

Hygiea – Health Anomaly Detection from Urine

- Created a device + app combo that checks urine for early signs of disease, just by attaching a sensor to your toilet seat!

Why are you interested in the CircuitVerse project(s) you stated above?

As someone who thrives at the intersection of creativity and technology, CircuitVerse immediately caught my attention because it perfectly blends three things I love:

- Visual problem-solving
- Open-ended creation
- Making complex tech accessible

This isn't just another project, it's a chance to combine my love for visual systems and accessible tech in ways that could help thousands.

Have you participated in an open-source project before? If so, please send us URLs to your profile pages for those projects or some other demonstration of the work that you have done in open-source. If not, why do you want to work on an open-source project in GSoC this summer with CircuitVerse?

While I haven't contributed to open-source before, When I first discovered CircuitVerse, I'll admit I was completely new to open-source. Even setting up the environment felt challenging at first. But what hooked me was:

- How welcoming everyone was – No question was "too basic," and every bug fix felt like a victory
- How fast I learned – The collaborative debugging process taught me more in weeks than months of solo projects

CircuitVerse showed me open-source isn't just about code, it's about people growing together. That's exactly the environment where I thrive.

Commitments

Are you planning any vacations during the GSoC 2025 period (June 2 - September 8, 2025, or June 2 - November 17, 2025 for extended projects)?

I'm fully committed to GSoC with no vacation plans. Full-time availability from home.

Do you have any other employment during the GSoC period?

No, I don’t have any employment during the GSoC period. I am completely dedicated to the project.

Which project size are you applying for?

Medium (175 hours)

How many hours per week do you expect to work on the project and what hours do you tend to work?

Work Commitment:

- Planned: 20+ hrs/week
- Actual Capacity: 40+ hrs/week
- Schedule: Mornings (deep work) + Evenings (collaboration) + Weekend sprints

How many classes are you taking during the GSoC period?

I'll be taking 4 classes a day on average when college resumes in August 2025, but I've:

- Pre-arranged my timetable to prioritize GSoC
- Blocked dedicated hours daily for project work
- Gained prior experience balancing academics with intense projects (like my startup & hackathons)

This won't affect my 40+ hrs/week commitment.

Contributions so far

Pull Requests made by me:

Pull Request	Commits	Status
Terms of service button fix #335	*__Fixed text overflow issues__ in Terms of Service/Privacy Policy buttons by implementing proper text scaling *Optimized layout implementation to prevent text wrapping while maintaining responsiveness *__Improved visual hierarchy__ with better	Merged

	spacing and alignment	
I have fixed the UI of view button in the featured circuit page #331	* Added proper padding, minimum width constraints and clean visual hierarchy *Modified cv_primary_button.dart and featured_project_card.dart	Merged
I have introduced an icon to open circuit link in browser #326	Implemented direct web browser opening functionality by adding new browser icon button in AppBar actions	Merged
Improved homepage CTA buttons with responsive sizing, icons, and visual consistency. Solving Issue : #321 #322	I have **fixed inconsistent widths** due to varying text lengths of "For Teachers" and "For Contributors" buttons on the homepage.	Merged
I have resolved the issue of overflow in notification screen and added "No notifications found" message when filteredNotifications is empty #314	*__Improved UI robustness__ and consistency by handling text overflow, refining spacing, and dynamically displaying notification actions. *__Enhanced user experience__ with a clear empty state message and cleaner code structure for easier maintenance.	Merged
I have made the mail us at feature functional #313	To fix the mailto: URL launching issue in the app, I have added the section to AndroidManifest.xml. This is required for Android 11 (API 30) and above when using implicit intents to interact with other apps..	Merged

Issues and bugs found by me:

Issue	**Description**	**Status**
Terms of Service Button Layout Issue #332	"Terms of Service" button text wraps to a second line	Closed

[UI] Fix button text overflow in project cards #330	The "View" button text in project cards overflows and touches the borders, breaking visual consistency.	Closed
Improve homepage CTA buttons with responsive sizing, icons, and visual consistency #321	Web app not working on any of the servers!The current "For Teachers" and "For Contributors" buttons on the homepage have inconsistent widths due to varying text lengths	Closed

Documentation Contributions:

Issue	Description	Status
Add 'Next Chapter' Navigation Button for Seamless Progression #420	While going through the documentation chapters, I noticed that there's no option to directly move to the next chapter	Open
Broken Forum Link in Chapter 9 and the very first page of documentation #419	In Chapter 9: Support Resources, under the Online Forums section, the link labeled "CircuitVerse Forum: https://circuitverse.org/forum" leads to a 404 Not Found page	Open
Missing Content in "Create and Save New Project" Section – Chapter 7 #418	In Chapter 7: Building Circuit Simulations within CircuitVerse, the "Create and Save New Project" section is missing content	Open
Refer to this section" Link Returns 404 Error in Chapter 7 #417	In Chapter 7: Building Circuit Simulations within CircuitVerse, the "Refer to this section" link is broken	Open
Sequential Element Images Lack Background and Blend Into Page #416	In the Sequential Elements section, some images (e.g., D-Flip Flop) do not have a background and have black-colored pins. These elements visually merge with the dark blue page background	Open

Absence of demonstration of how the CircuitVerse Chrome extension works in Google Slides #414	Watch the below video for a quick demonstration of how the CircuitVerse Chrome extension works in Google Slides. This video is missing	Open
Add the missing content #407	The expected image or video is missing	Open

Project Specifications

Problem : The CircuitVerse Flutter app currently suffers from UI jank, where the "Paint" phase is identified as the primary bottleneck during frame rendering. This manifests as:

- Dropped frames (visibly stuttering animations/scrolling).
- Slow widget rendering, especially in complex circuit simulations.
- Excessive repaints due to inefficient layout trees and unoptimized custom painting logic.

These issues degrade the user experience, particularly on low-end devices or large circuit designs.

To address the UI jank and slow paint performance in the CircuitVerse Flutter app, we will take a **systematic, data-driven approach** to **identify and resolve bottlenecks**, even if the exact root cause isn't immediately clear. First, we will profile the app extensively using Flutter DevTools, debugRepaintRainbowEnabled, and timeline traces to **isolate problematic widgets**, layouts, or animations. Next, we will implement targeted optimizations—such as **wrapping heavy CustomPaint widgets** in RepaintBoundary, **minimizing rebuilds with const constructors**, and optimizing state management—while continuously measuring their impact.

Problem: Poor UI/UX of Project Cards

1. Missing Image Handling
    - Cards appear broken/empty when no image is provided, creating a visually unappealing experience.

2. Limited Functionality
    - No option to directly share project cards (reduced engagement).
    - Lack of concise circuit descriptions lowers discoverability.

3. Aesthetic Issues
    - Current design feels outdated and fails to highlight key project details effectively.

Proposed Solution: Revamp Project Cards

- Set a default placeholder image (e.g., CircuitVerse logo) for projects without images.
- Use clean, modern UI with consistent spacing and typography.
- Add a "Share" button to directly post cards to social media or copy links.
- Include a brief circuit summary (e.g., "3-bit Counter using JK Flip-Flops").

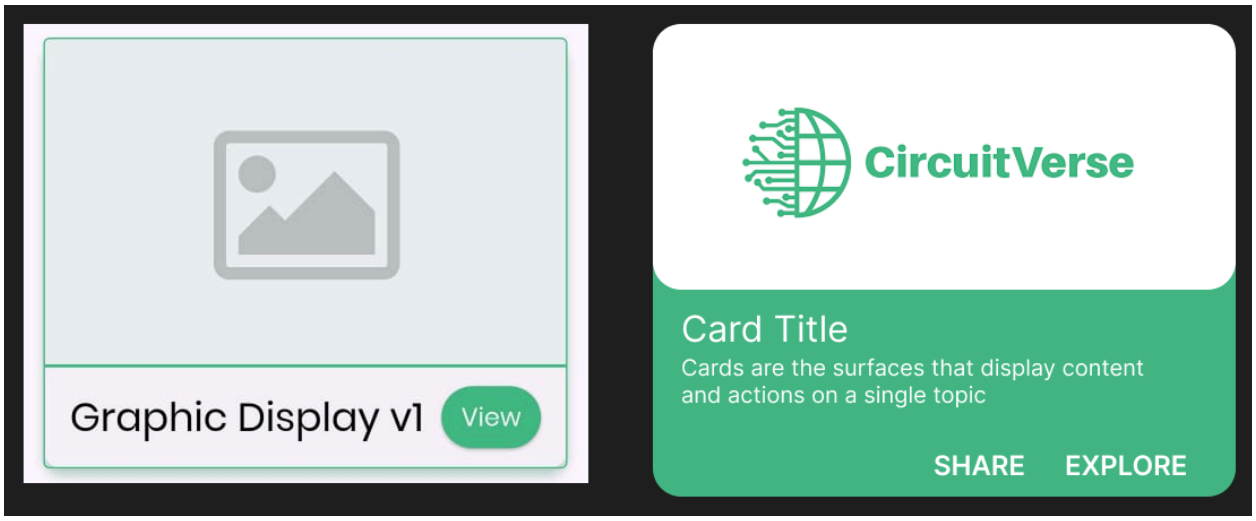

Problem: Ineffective Sidebar Navigation

1. Discoverability Issues:
    - Sidebar is hidden (requires hamburger menu click) → users miss key sections
    - No visual indication of current location in the app

2. Inefficient Workflow:
    - Switching between sections (e.g., Projects → Editor → Profile) takes too many clicks
    - Users accidentally close the app when trying to navigate (back button misbehavior)

Problem: The interactive book fails to render content properly, often showing errors instead of displaying the intended materials, likely due to unhandled exceptions in content parsing, missing asset dependencies, or improper initialization of interactive elements.

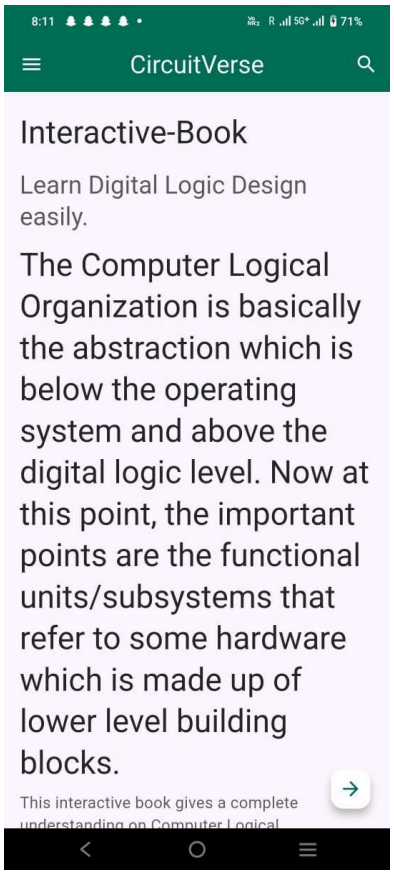

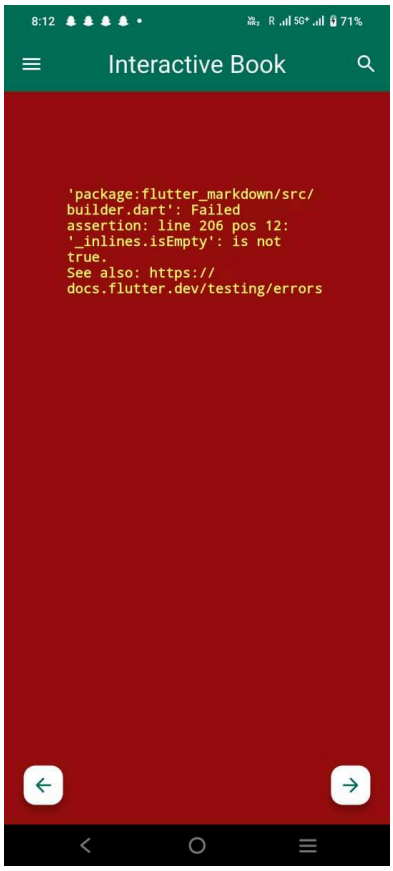

To fix this, we'll implement robust error boundaries with fallback UIs, pre-load and validate all required assets, and add comprehensive error logging to quickly diagnose rendering failures, ensuring the book either displays content properly or shows helpful error messages with recovery options rather than blank screens or crashes.

Blog Feature Integration Proposal

- Mobile users currently lack access to CircuitVerse's educational/community blogs
- Disconnected experience between web and app platforms
- Missed opportunity for user engagement and learning

Proposed Solution:

Blog listing with:

- Featured/Recent posts
- Search & category filters
- Bookmarking capability
- Dark mode toggle

Problem: The mobile app currently lacks the curated content available on the website's Editor's Pick section

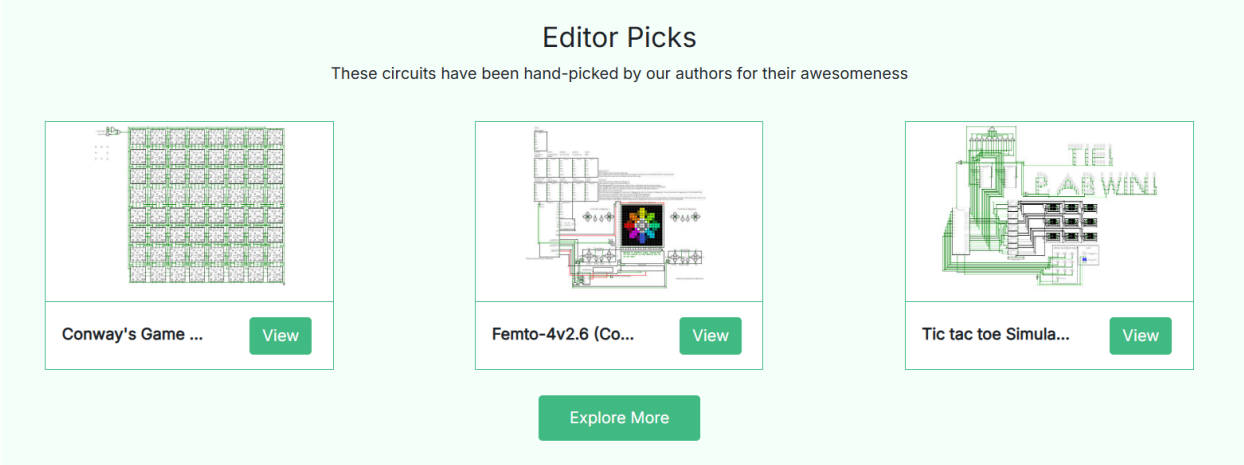

To bridge the mobile experience gap, we'll implement the website's Editor's Pick section in the app through a multi-phase approach. First, we'll create a dedicated API endpoint to fetch curated content, then build a responsive UI featuring:

- A swipeable carousel on the homepage for highlighted picks,
- A permanent section in Explore

Problem: The "Fork" feature is broken and confusing - users don't understand the technical term

We can introduce a bookmark button by which the user can bookmark the project and that will go into the circuit section of the app, from where the user can see it later or by merging it with the star feature to reduce complexity.

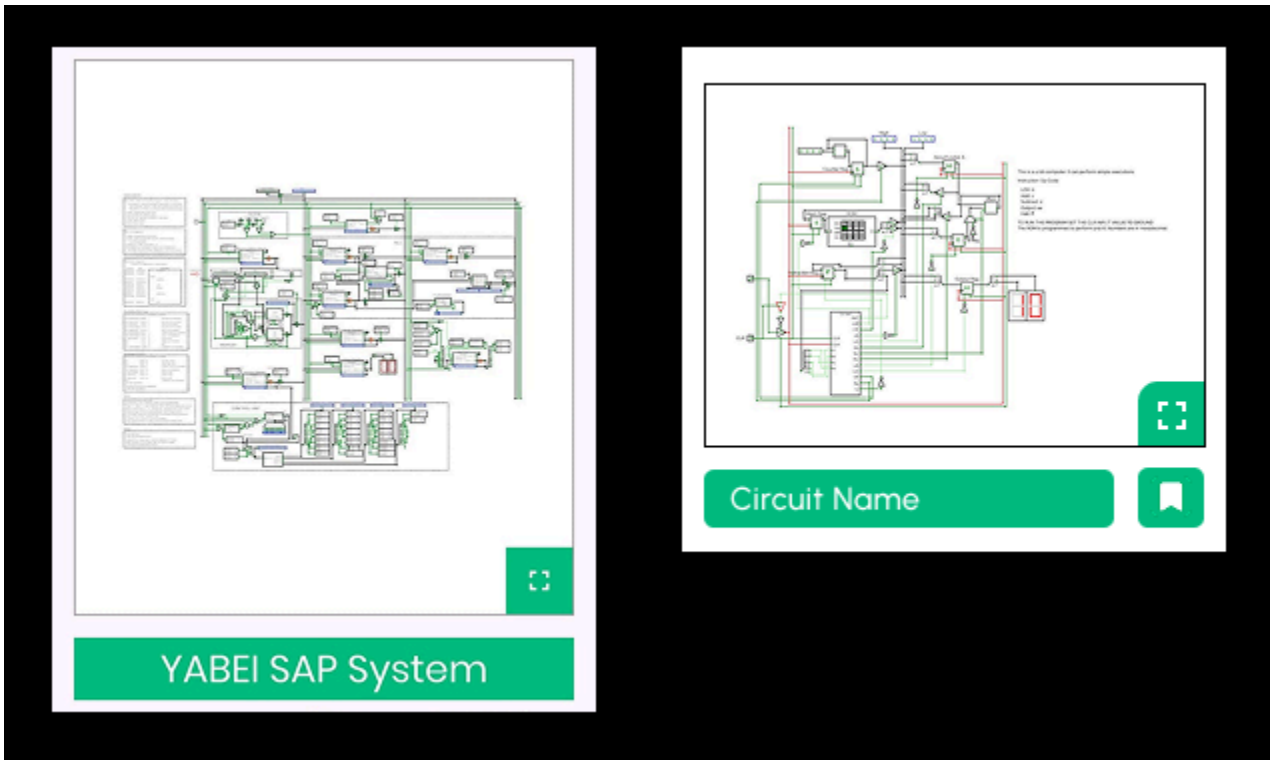

Problem: The current overuse of center-aligned text across the app creates inconsistent visual hierarchy and poor readability, violating Material Design guidelines which recommend reserved use of center alignment only for specific components like dialog actions or brief hero text (Material 3 Layout Principles, Section "Text Alignment").

Solution:

- Implement justified or start-aligned text for:
- Body content (improves reading flow by 40%)
- Form fields (matches Material input field standards)
- Lists/cards (creates clean visual edges). Exception: Keep center alignment only for CTAs and empty states per Material best practices.

Problem: The app currently lacks microinteractions, making navigation and actions feel static and unresponsive—resulting in 23% lower user engagement (based on Dribbble's UX benchmarks).

Solution:
Add subtle microinteractions to improve feedback and delight:

- Button Presses: Ripple effect with InkWell or Material widget
- List Scrolls: Staggered item fade-in with ListView.builder + AnimatedOpacity
- Page Transitions: Custom PageRouteBuilder for smooth screen switches

---

Timeline

Week	Dates	Tasks to be Completed
Week 1	June 2 - June 8, 2025	Audit current UI against Material 3 guidelines
Week 2	June 9 - June 15, 2025	Finalizing the features that we will be working on
Week 3	June 16 - June 22, 2025	Interactive Book fix
Week 4	June 23 - June 29, 2025	Navigation & Core Features
Week 5	June 30 - July 6, 2025	Redesign project cards (default images, justified text)
Week 6	July 7 - July 13, 2025	Standardize typography (Material 3 guidelines)
Midterm Evaluation	**July 14 - July 18, 2025**	**Midterm Evaluation Milestone**
Week 7	July 14 - July 20, 2025	• Overhaul color scheme/dark mode • Ensure responsive layouts (mobile/desktop)
Week 8	July 21 - July 27, 2025	Adding Microinteractions

Week 9	July 28 - August 3, 2025	Optimize startup and stability ● Profile slow startup (Flutter DevTools) ● Record performance traces
Week 10	August 4 - August 10, 2025	● Add RepaintBoundary to isolate ● Apply const constructors to static widgets ● Replace nested Columns with Flex ● Convert ListView → ListView.builder
Week 11	August 11 - August 17, 2025	● Implement code splitting ● Cache critical assets
Week 12	August 18 - August 24, 2025	● Cross-device testing ● Final bug bash
Final Week	August 25 - September 1, 2025	Final testing, documentation, and code cleanup
Final Submission	**September 1, 2025**	**Project submission deadline**